ORDER NO. CRCI-2001

# NATIONAL Service Manual

## TRANSISTOR CAR RADIO

## MODEL CR-555, CR-555S

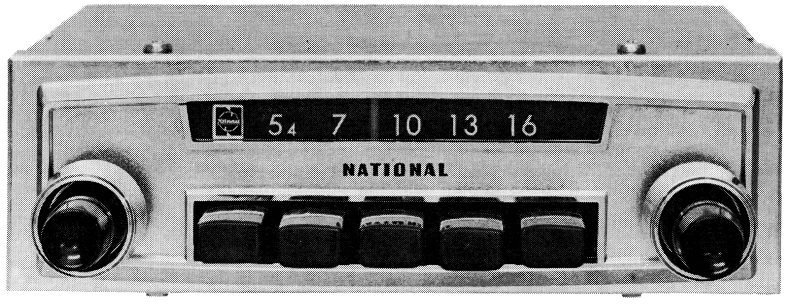


★ Difference between CR-555 and CR-555S

The CR-555S does not include speaker, and consists of only an amplifier and accessories. It is so designed as to be used combined with a mounting kit (panel) and speaker. Most of the accessories for both are the same.

## SPECIFICATIONS

| | |
|---|---|
| Circuit System: | 1 RF & 2 IF amplification stages, Pushpull system, 8 transistors |
| Tuning System: | μ-tuning-Manual/Pushbuttons (5 buttons) System |
| Receiving Frequency: | 535 KC - 1605 KC |
| Intermediate Frequency: | 450 KC |
| Sensistivity: | 20 μV (26 dB) or less (at 500 mW rated output) |
| Selectivity: | 20 dB or more (at ± 10 KC detuning) |
| AGC Charactristics: | 40 dB or more |
| Output Impedance: | 8 ohms |
| Maximum Output: | 3.0 watts or more |
| Power Supply Voltage: | DC 11-16 volts (standard voltage 13.2V) Exclusive for negative ground |
| Antenna Capacity: | 80 pf ± 10 pf |


<EXPORT DIVISION>
MATSUSHITA ELECTRIC TRADING CO., LTD.
P. O. Box 288, Central Osaka, Japan

MATSUSHITA COMMUNICATION INDUSTRIAL CO., LTD.
CAR RADIO DEPT.

# LOCATION OF PARTS

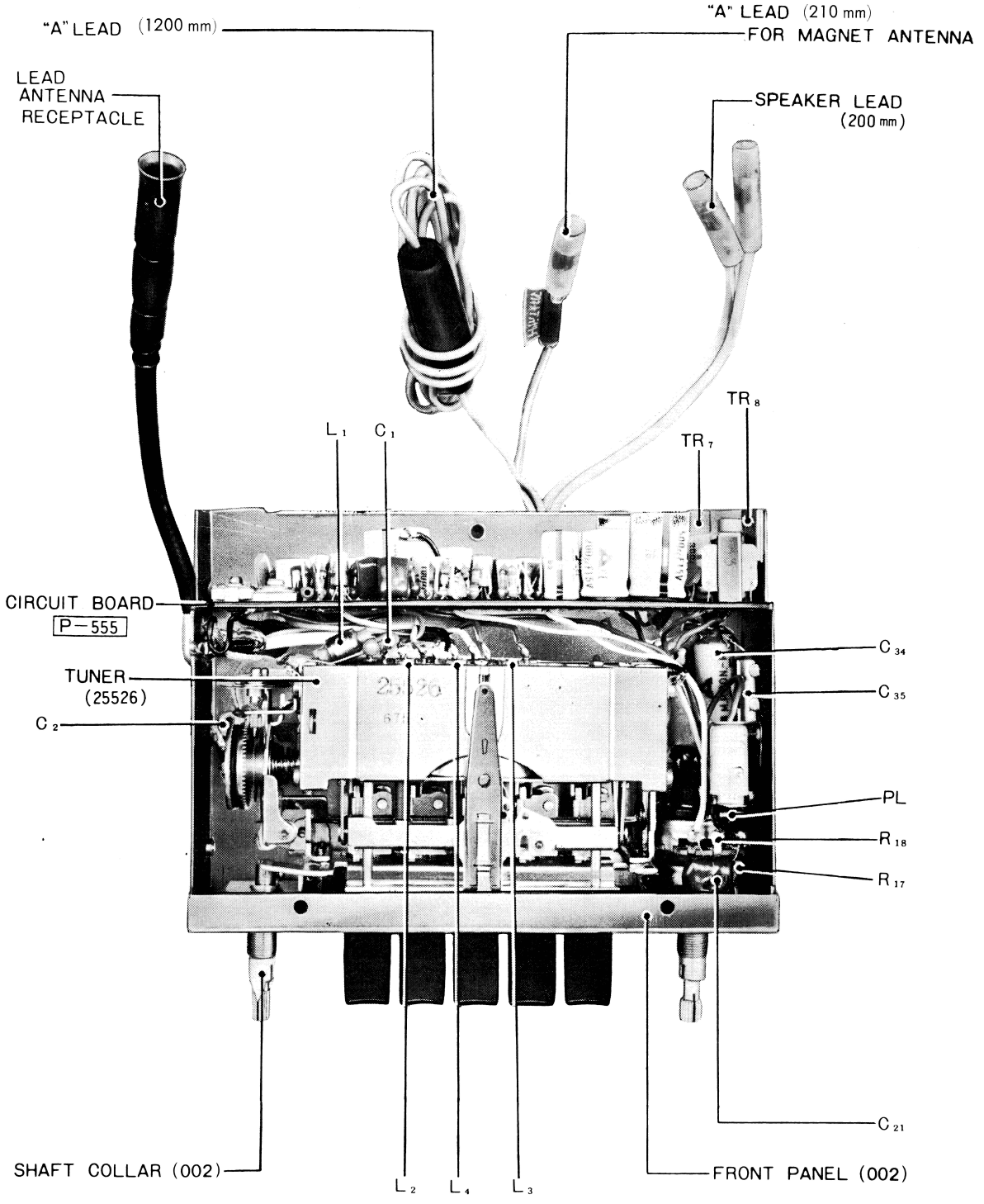


Fig. 1 Top View-Parts Identification.

## Resistors, Transistors, Diodes and Thermistors

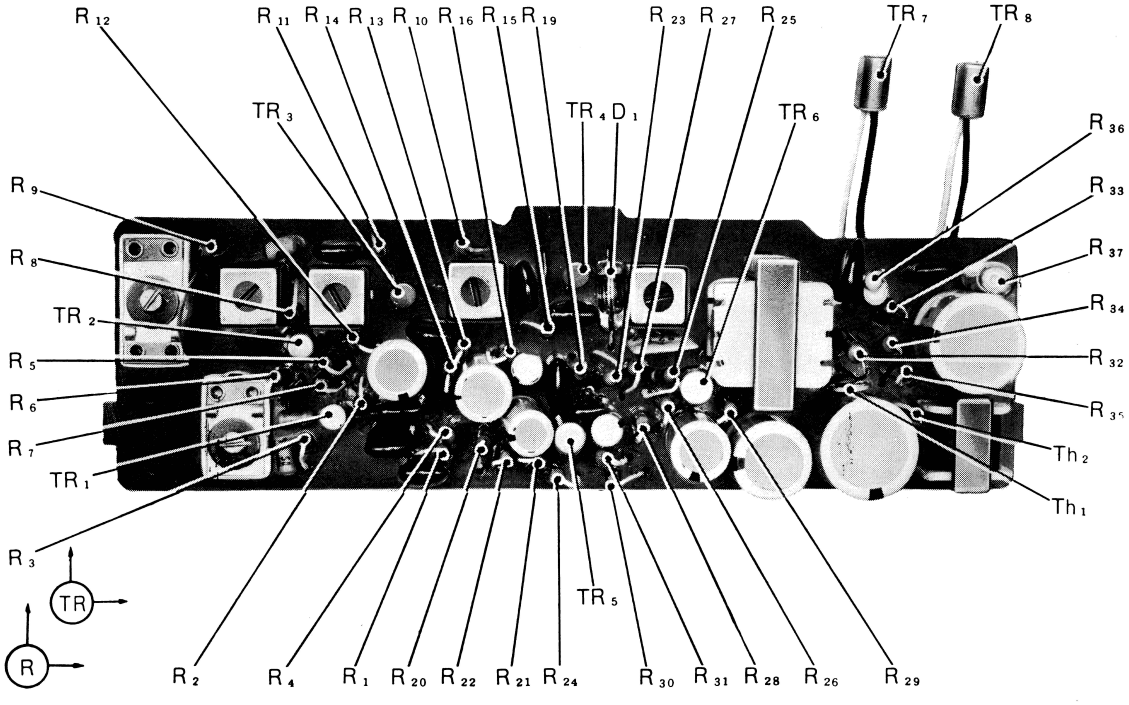


Fig. 2 Component View-Parts Identification.

## Condensers, Transformers, Combined parts and Coils

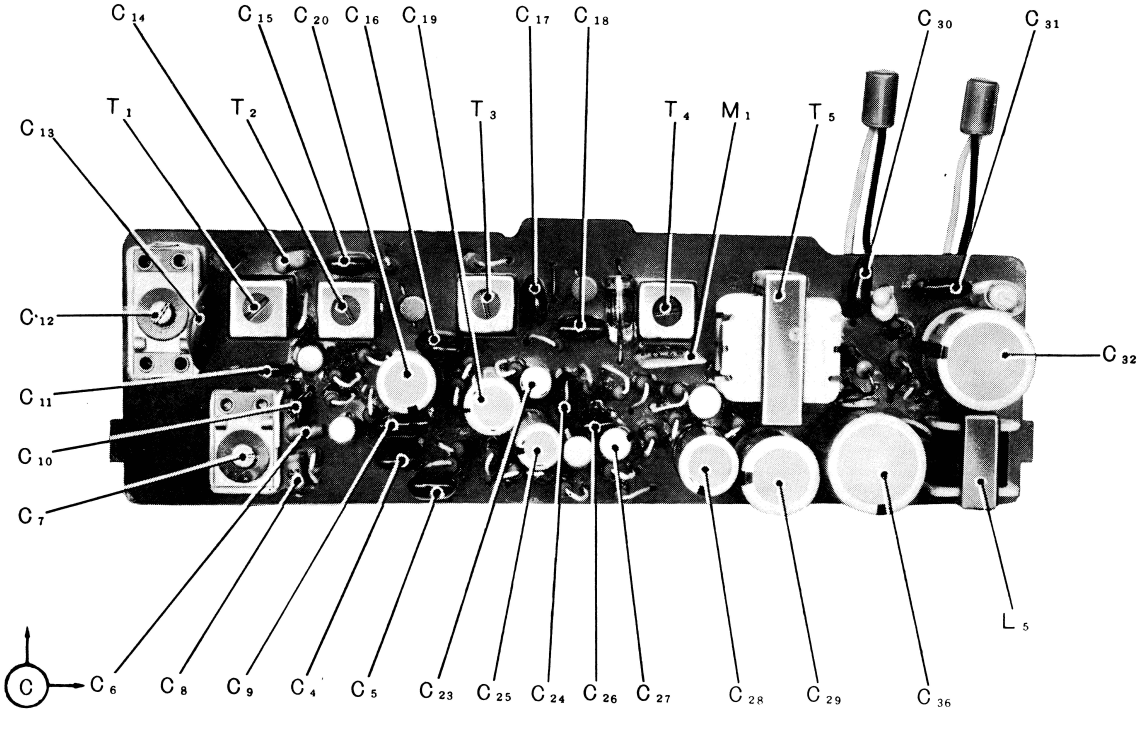


Fig. 3 Component View-Parts Identification.

# COMPOSITION

| | |
|---|---|
| Radio Set | 1 (See front cover) |
| Speaker | 1 (See Fig. 4) |
| Accessories | 1 set (See Fig. 5, 6) |

*CR-555S does not include speaker.

## SPEAKER (EAS-12P24SA 12 cm)

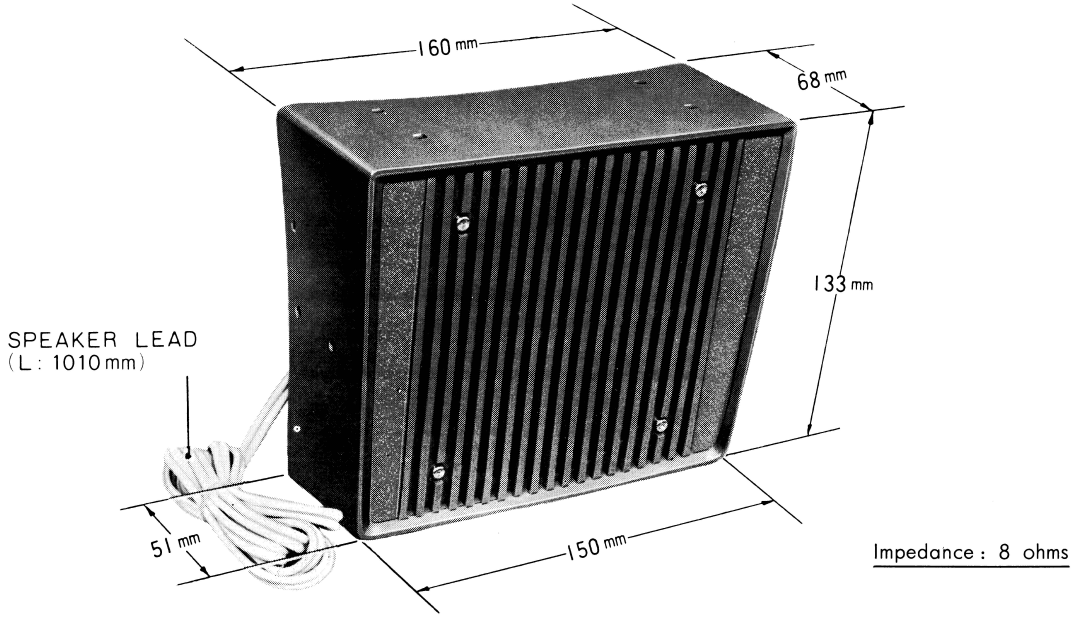


Fig. 4

## ACCESSORY LIST

For Radio Set

| Name | | Standard | Quantity | Type |
|---|---|---|---|---|
| Trim plate | ① | Chrome plated ABS resin | 1 | ① |
| Trim plate ornament | ② | PVC covered aluminum plate | 1 | |
| Knob 001 | ③ | | 2 | ② |
| Knob 512 | ④ | ABS resin | 2 | |
| Felt for knob 001 | ⑤ | Black felt | 1 | ③ ④ |
| Lock nut | ⑥ | 9 mm $\phi$ | 2 | |
| Plain washer | ⑦ | 9 mm $\phi$ | 2 | ⑤ ⑥ ⑦ |

Fig. 5

## For Speaker

| Name | Standard | Quantity |
|---|---|---|
| Speaker bracket 001 ⑧ | | 2 |
| Speaker bracket retainer ⑨ | | 2 |
| Machine screw ⑩ (for Philips screwdriver) | 3 mm $\phi$ × 10 mm | 4 |
| Spring washer ⑪ | 3 mm $\phi$ | 4 |
| Plain washer ⑫ | 3 mm $\phi$ | 4 |

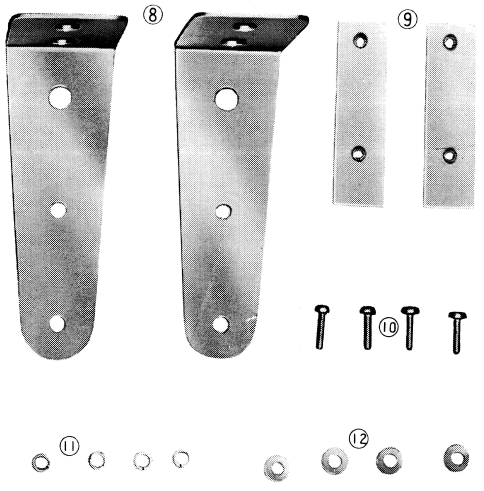


## Interference Suppressors

| | | |
|---|---|---|
| Condenser ⑬ | 61202 | 2 |
| Resistor ⑭ | ERA-S10 (S type) | 1 |

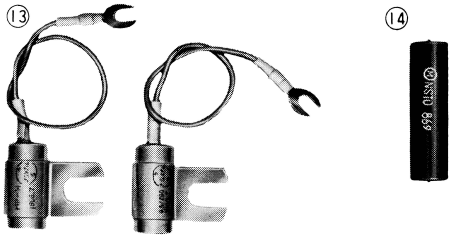


## Mounting Parts

| | | |
|---|---|---|
| Hexagonal bolt ⑮ | 5 mm $\phi$ × 30 mm | 2 |
| 〃 ⑯ | 5 mm $\phi$ × 15 mm | 1 |
| 〃 ⑰ | 5 mm $\phi$ × 8 mm | 1 |
| Hexagonal nut ⑱ | 5 mm $\phi$ | 3 |
| Spring washer ⑲ | 5 mm $\phi$ | 4 |
| Plain washer ⑳ | 5 mm $\phi$ | 5 |
| Support strap ㉑ | | 1 |

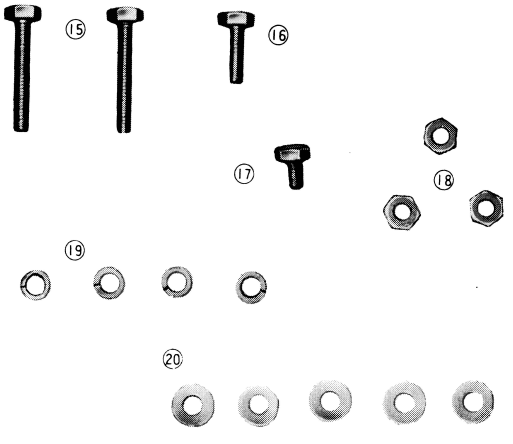


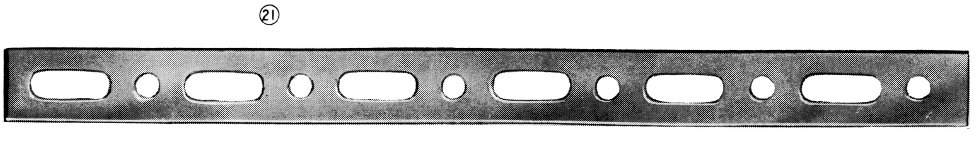


Those for speaker ⑧—⑫, hexagonal bolt ⑮, two hexagonal nuts ⑱ and two spring washers ⑲ are not furnished with CR-555S.

Fig. 6

# ALIGNMENT INSTRUCTIONS

(1) Preparations before adjusting

| | | |
|---|---|---|
| 1) | Power supply voltage | DC 13.2 V negative ground |
| 2) | Volume ($R_{17}$ $R_{18}$) | Turn the volume control to maximum and set tone control at treble. |
| 3) | Signal generator output | Modulation frequency 400 c/s 30 % modulation |
| 4) | Output load | An 8-ohm ohmic resistor (5 watts or more) or a loudspeaker |
| 5) | Signal supplying point | Antenna receptacle through dummy antenna |
| 6) | Dummy antenna | See Fig. 7. |

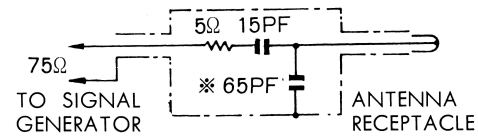


※ includes feeder capacity.

Fig. 7

(2) Adjusting procedure (See Fig. 8)

| Adjusting Step | Adjusting Point | | Signal Frequency | Radio Dial Position | Remarks |
|---|---|---|---|---|---|
| 1 | IFT adjustment | $T_4$ (black) | 450 KC | In the vicinity of 1,500 KC where there is no station | Repeat adjustment 3-4 times for maximum output. |
| 2 | | $T_3$ (white) | 〃 | 〃 | |
| 3 | | $T_2$ (blue) | 〃 | 〃 | |
| 4 | | $T_1$ (pink) | 〃 | 〃 | |
| 5 | Matching adjustment | OSC trimmer $C_{12}$ | 1400 KC | *1400 KC (See Fig. 9) | Adjust for maximum output. |
| 6 | | RF trimmer $C_7$ | 〃 | 〃 | |
| 7 | | Ant. trimmer $C_2$ | 〃 | 〃 | |

※ After adjustment set the dial pointer at extreme right and then left, and confirm that signals of 535 KC and 1,605 KC from the signal generator are received, respectively.

※ Tune to a signal in the vicinity of 1400 KC and adjust antenna trimmer ($C_2$) for a maximum output when the radio set is installed in the car after bench adjustment, or when the antenna has been replaced.

* 1400 KC point: Tuner core stroke 16.7 mm.

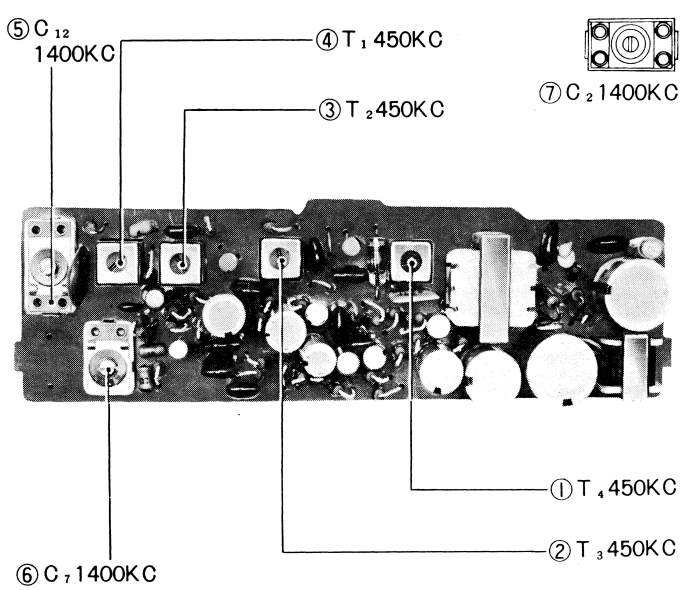


Fig. 8

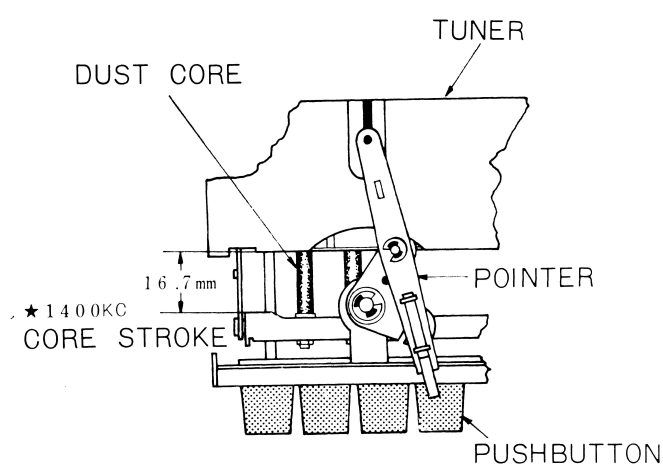


Fig. 9

## HOW TO EXCHANGE PANEL DESIGN (See Fig. 10)

By turning or removing the trim plate ornament ②, any desired design can be selected among "wood grain," "black leather" and "metallic." For exchanging design from "wood grain" to "black leather," or vice versa, turn the trim plate ornament ② as instructed below. For "metallic" design, remove the trim plate ornament.

(1) Remove knobs ③ and ④, felt ⑤, lock nuts ⑥ and plain washers ⑦ out of both right and left shafts on the front panel.

(2) Select a design, and attach the trim plate ornament ② to the trim plate ① or remove it, accordingly.

(3) Fix the removed plain washers, lock nuts, felts and knobs, as before.

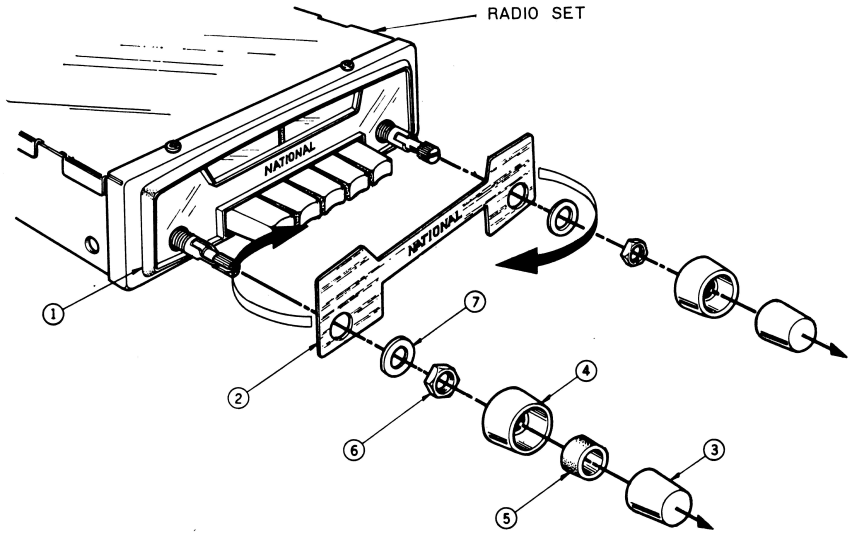


Fig. 10

## HOW TO ATTACH SPEAKER (See Fig. 11)

A speaker and the parts for fixing are separately provided for CR-555 so that the speaker may be attached to the following positions.

(1) To the dashboard or cowl side panel

Fit speaker brackets ⑧ horizontally to both sides of the speaker box, and insert machine screws ⑩ and spring washers ⑫ with plain washers ⑪ attached into the bracket and speaker box holes. Then, screw them into the threaded holes of the bracket retainer fitted from the interior of the speaker box.

✻ When there is no sufficient space for installing the speaker box, fix the brackets to it as indicated by the dotted line in Fig. 11.

✻ Use hexagonal bolt ⑮, hexagonal nuts ⑱, spring washers ⑲ and plain washers ⑳, specified in paragraph 2-2 ACCESSORY LIST to attach the speaker bracket to the dashboard or cowl side panel.

(2) To the instrument upper panel or parcel tray

Fix the brackets vertically to the speaker box as indicated by the dotted line (— - — - — - —), and in the same way as (1) unless there is sufficient space available.

| REF. No. | CODE No. | PART No. | DESCRIPTION |
|---|---|---|---|
| $C_4$ | 207006 | MS-05503M | 0.05μf 50WV, ±20%, Polyester |
| $C_5$ | 207006 | MS-05503M | 0.05μf 50WV, ±20%, Polyester |
| $C_6$ | 210205 | CC601SL060DZ50 | 6pf 50WV, ±0.5pf Titanium |
| $C_7$ | 203062 | TT-70 | 70pf Trimmer |
| $C_8$ | 210212 | CC602SL500KZ50 | 50pf 50WV, ±10%, Titanium |
| $C_9$ | 207006 | MS-05503M | 0.05μf 50WV, ±20%, Polyester |
| $C_{10}$ | 207005 | MS-05102K | 0.002μf 50WV, ±10%, Polyester |
| $C_{11}$ | 207001 | MS-05502K | 0.005μf 50WV, ±10%, Polyester |
| $C_{12}$ | 203058 | TA-150 | 150pF Trimmer |
| $C_{13}$ | 210069 | CC63TH341JO | 340pf 50WV, ± 5 %, Titanium |
| $C_{14}$ | 210087 | CC601SL040CZ50 | 4pf 50WV, ±0.25pf, Titanium |
| $C_{15}$ | 207006 | MS-05503M | 0.05μf 50WV, ±20%, Polyester |
| $C_{16}$ | 207006 | MS-05503M | 0.05μf 50WV, ±20%, Polyester |
| $C_{17}$ | 207006 | MS-05503M | 0.05μf 50WV, ±20%, Polyester |
| $C_{18}$ | 207006 | MS-05503M | 0.05μf 50WV, ±20%, Polyester |
| $C_{19}$ | 208186 | ECE-6V100 | 100μf 6WV, Electrolytic |
| $C_{20}$ | 208241 | ECE-A15V100H | 100μf 15WV, Electrolytic |
| $C_{21}$ | 207011 | MS-05204M | 0.2μf 50WV, ±20%, Polyester |
| $C_{22}$ | 207006 | MS-05503M | 0.05μf 50WV, ±20%, Polyester |
| $C_{23}$ | 208188 | ECE-A6V10 | 10μf 6WV, Electrolytic |
| $C_{24}$ | 207006 | MS-05503M | 0.05μf 50WV, ±20%, Polyester |
| $C_{25}$ | 208193 | ECE-A3V100 | 100μf 3WV, Electrolytic |
| $C_{26}$ | 207007 | MS-05203M | 0.02μf 50WV, ±20%, Polyester |
| $C_{27}$ | 208188 | ECE-A6V10 | 10μf 6WV, Electrolytic |
| $C_{28}$ | 208191 | ECE-A3V300 | 300μf 3WV, Electrolytic |
| $C_{29}$ | 208177 | ECE-A15V200 | 200μf 15WV, Electrolytic |
| $C_{30}$ | 207006 | MS-05503M | 0.05μf 50WV, ±20%, Polyester |
| $C_{31}$ | 207006 | MS-05503M | 0.05μf 50WV, ±20%, Polyester |
| $C_{32}$ | 208175 | ECE-A15V300 | 300μf 15WV, Electrolytic |
| $C_{33-1}$ & $_2$ | 203002 | SP-6C-401×2 | 400pf×2 Spark Plate |
| $C_{34}$ | 206052 | ECH-R1504M | 0.5μf 150WV, Metallized |
| $C_{35}$ | 203001 | SP-1C-601 | 600pf Spark Plate |
| $C_{36}$ | 208198 | ECE-A15V500 | 500μf 15WV, Electrolytic |
| | | **COILS AND TRANSFORMERS** | |
| $L_1$ | 224054 | Lo-004 | Loading Coil |
| $L_2$, $L_3$, $L_4$ | 230443 | AT-25526 | Tuner Assembly |
| $L_5$ | 224013 | TCH-021 | Filter Choke Coil |
| $T_1$ | 225054 | IF-22030 | 1st IFT : 450 KC |
| $T_2$ | 225055 | IF-22031 | 2nd IFT : 450 KC |
| $T_3$ | 225056 | IF-22032 | 3rd IFT : 450 KC |
| $T_4$ | 225057 | IF-22033 | 4th IFT : 450 KC |
| $T_5$ | 223027 | TIT-021 | P2.1KΩ : S 300Ω×2, Input Transformer |
| | | **COMPONENT COMBINATION** | |
| $M_1$ | 231001 | RC-12004MYZ | R : 270Ω C : 0.01μf×2 |
| | | **MISCELLANEOUS** | |
| F | 218004 | | 2A, Fuse |
| PL | 217008 | 70010 | 12V, 3 Watt, Pilot Lamp |
| | 258016 | PL Holder, 004 | |
| | 229069 | ANT. Receptacle, 009 | |
| | 246029 | Heat Sink, 016 | |
| | 243050 | Dial Pointer, 006 | |
| | 244086 | Escutcheon | |
| | 244087 | Escutcheon Ornament | |
| | 252098 | Dial Plate | |
| | 251091 | Knob, 001 | Knob, Tuning & Volume Control |
| | 251118 | Knob, 512 | Knob, Dummy & Tone Control |
| | 252112 | Shaft Collar, 002 | |
| | 254026 | Felt, 001 | |
| | | **SPEAKER** | |
| SP | 235041 | EAS-12P24SA | 12 cm (5″), 8, 3.5 Watt |

PRINTED IN JAPAN

# CR-555·555S CIRCUIT DIAGRAM

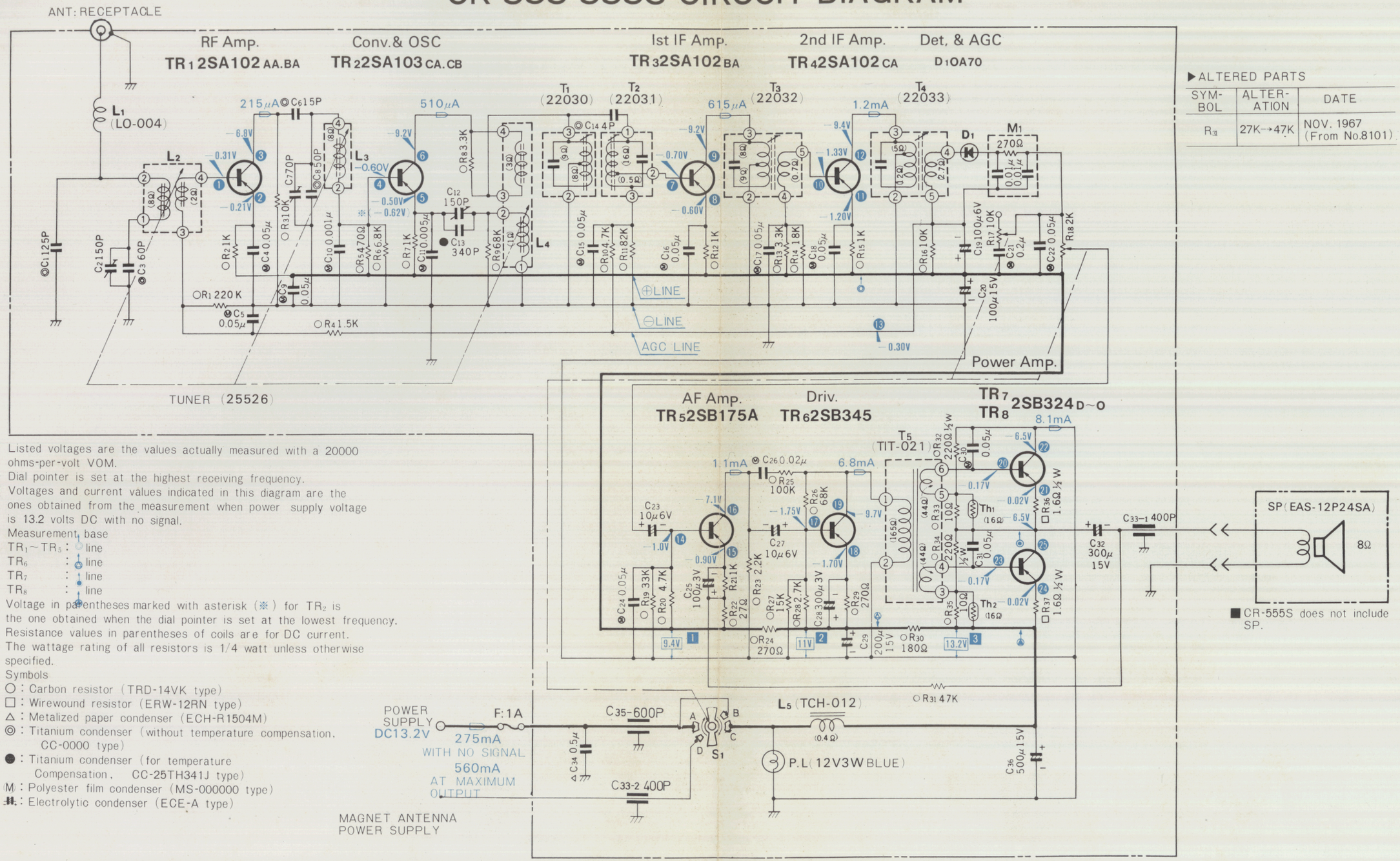


▶ALTERED PARTS

| SYM-BOL | ALTER-ATION | DATE |
|---|---|---|
| R31 | 27K→47K | NOV. 1967 (From No.8101) |

■ 1) Listed voltages are the values actually measured with a 20000 ohms-per-volt VOM.
2) Dial pointer is set at the highest receiving frequency.
3) Voltages and current values indicated in this diagram are the ones obtained from the measurement when power supply voltage is 13.2 volts DC with no signal.
4) Measurement base
TR1~TR5 : ⊖ line
TR6 : ⊕ line
TR7 : ⊕ line
TR8 : ⊕ line
5) Voltage in parentheses marked with asterisk (※) for TR2 is the one obtained when the dial pointer is set at the lowest frequency.
6) Resistance values in parentheses of coils are for DC current.
7) The wattage rating of all resistors is 1/4 watt unless otherwise specified.
8) Symbols
○ : Carbon resistor (TRD-14VK type)
□ : Wirewound resistor (ERW-12RN type)
△ : Metalized paper condenser (ECH-R1504M)
◎ : Titanium condenser (without temperature compensation, CC-0000 type)
● : Titanium condenser (for temperature Compensation, CC-25TH341J type)
M : Polyester film condenser (MS-000000 type)
: Electrolytic condenser (ECE-A type)

■ CR-555S does not include SP.

| | | |

# CR-555·555S CIRCUIT DIAGRAM

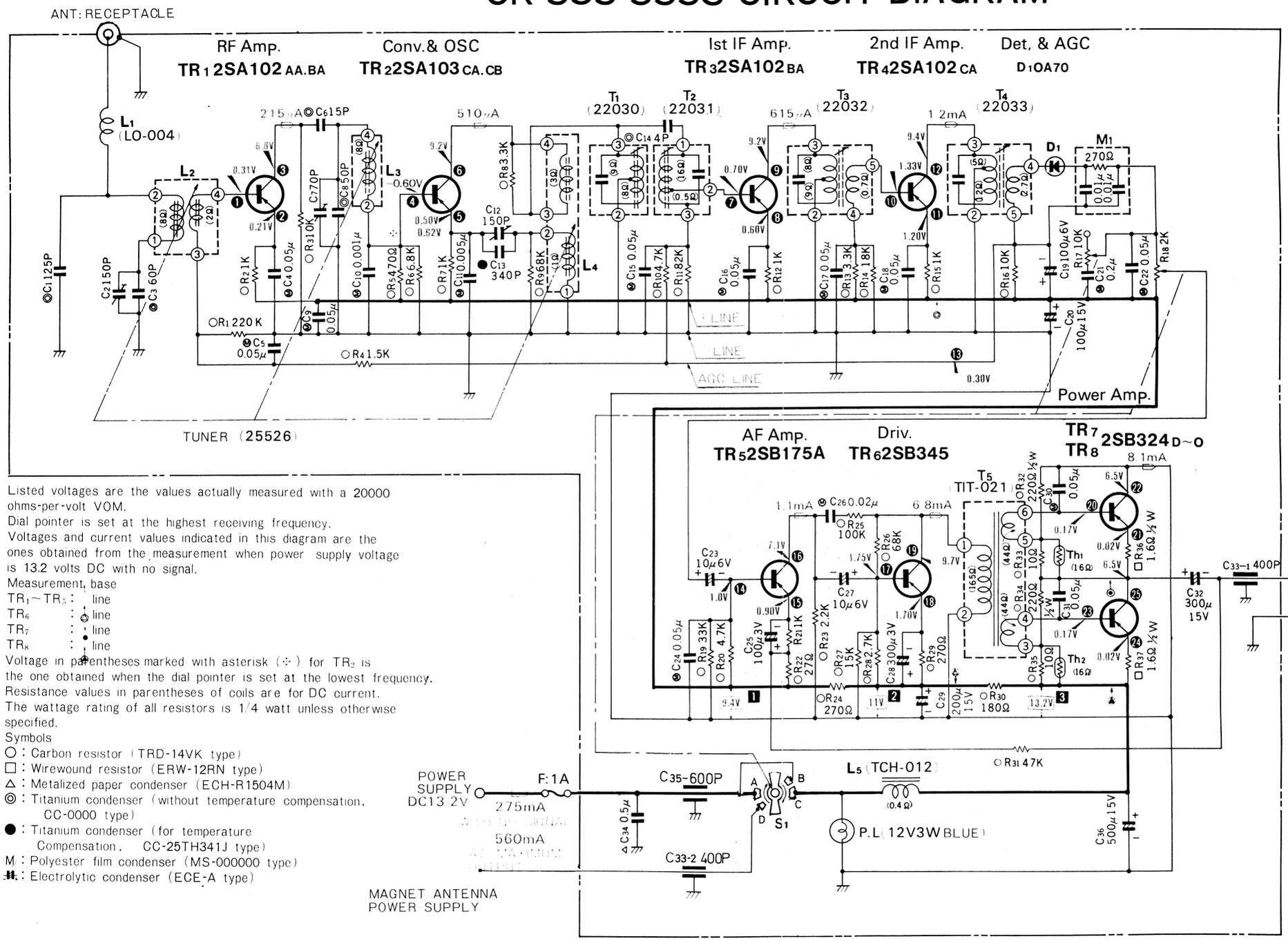


■ CR-555S does not include SP.

▶ALTERED PARTS

| SYMBOL | ALTERATION | DATE |
|---|---|---|
| R31 | 27K→47K | NOV. 1967 (From No.8101) |

■ 1) Listed voltages are the values actually measured with a 20000 ohms-per-volt VOM.
2) Dial pointer is set at the highest receiving frequency.
3) Voltages and current values indicated in this diagram are the ones obtained from the measurement when power supply voltage is 13.2 volts DC with no signal.
4) Measurement base
TR1~TR5 : line
TR6 : line
TR7 : line
TR8 : line
5) Voltage in parentheses marked with asterisk (*) for TR2 is the one obtained when the dial pointer is set at the lowest frequency.
6) Resistance values in parentheses of coils are for DC current.
7) The wattage rating of all resistors is 1/4 watt unless otherwise specified.
8) Symbols
○ : Carbon resistor (TRD-14VK type)
□ : Wirewound resistor (ERW-12RN type)
△ : Metalized paper condenser (ECH-R1504M)
◎ : Titanium condenser (without temperature compensation, CC-0000 type)
● : Titanium condenser (for temperature Compensation, CC-25TH341J type)
M : Polyester film condenser (MS-000000 type)
: Electrolytic condenser (ECE-A type)

| | |
|---|---|
| R | 1 2 3 4 5 6 7 8 9 10 11 19 20 12 22 21 23 13 27 14 26 24 25 28 15 29 16 32 34 30 (31) 33 35 17 36 37 18 |
| C | 1 2 3 4 5 9 6 8 7 10 11 12 13 15 14 34 35 33-2 24 23 16 25 17 26 27 18 29 28 19 30 20 31 21 22 36 32 33—1 |
| L.T.M D.Th | L1 L2 L3 L4 T1 T2 T3 T4 Th1 D1 Th2 M1 |

⓪ ··· ALTERED PARTS

# CR-555 555S CIRCUIT BOARD

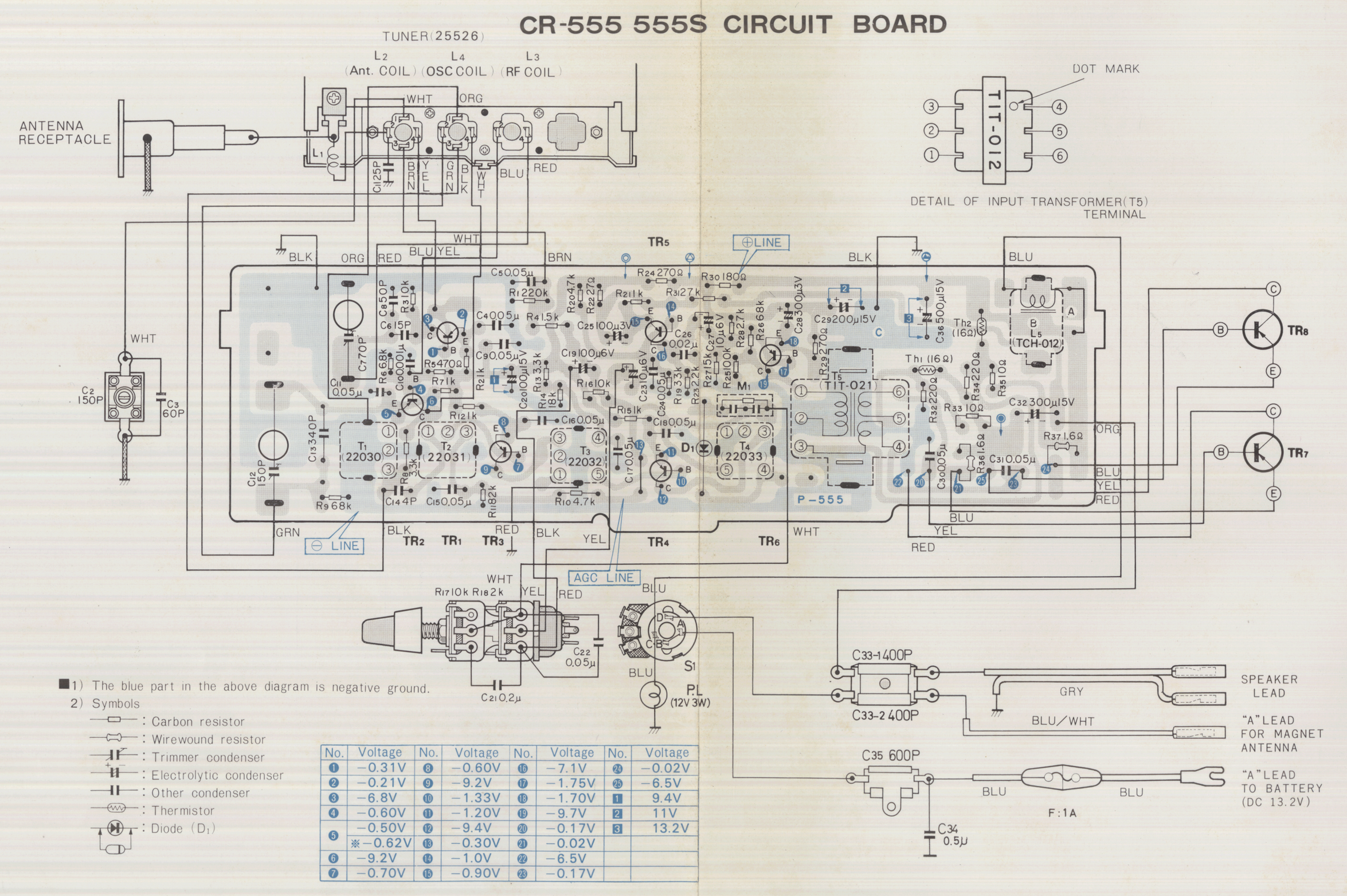


■1) The blue part in the above diagram is negative ground.

2) Symbols

- : Carbon resistor
- : Wirewound resistor
- : Trimmer condenser
- : Electrolytic condenser
- : Other condenser
- : Thermistor
- : Diode ($D_1$)

| No. | Voltage | No. | Voltage | No. | Voltage | No. | Voltage |
|---|---|---|---|---|---|---|---|
| 1 | −0.31V | 8 | −0.60V | 16 | −7.1V | 24 | −0.02V |
| 2 | −0.21V | 9 | −9.2V | 17 | −1.75V | 25 | −6.5V |
| 3 | −6.8V | 10 | −1.33V | 18 | −1.70V | 1 | 9.4V |
| 4 | −0.60V | 11 | −1.20V | 19 | −9.7V | 2 | 11V |
| 5 | −0.50V | 12 | −9.4V | 20 | −0.17V | 3 | 13.2V |
| | ※−0.62V | 13 | −0.30V | 21 | −0.02V | | |
| 6 | −9.2V | 14 | −1.0V | 22 | −6.5V | | |
| 7 | −0.70V | 15 | −0.90V | 23 | −0.17V | | |

# CR-555 555S CIRCUIT BOARD

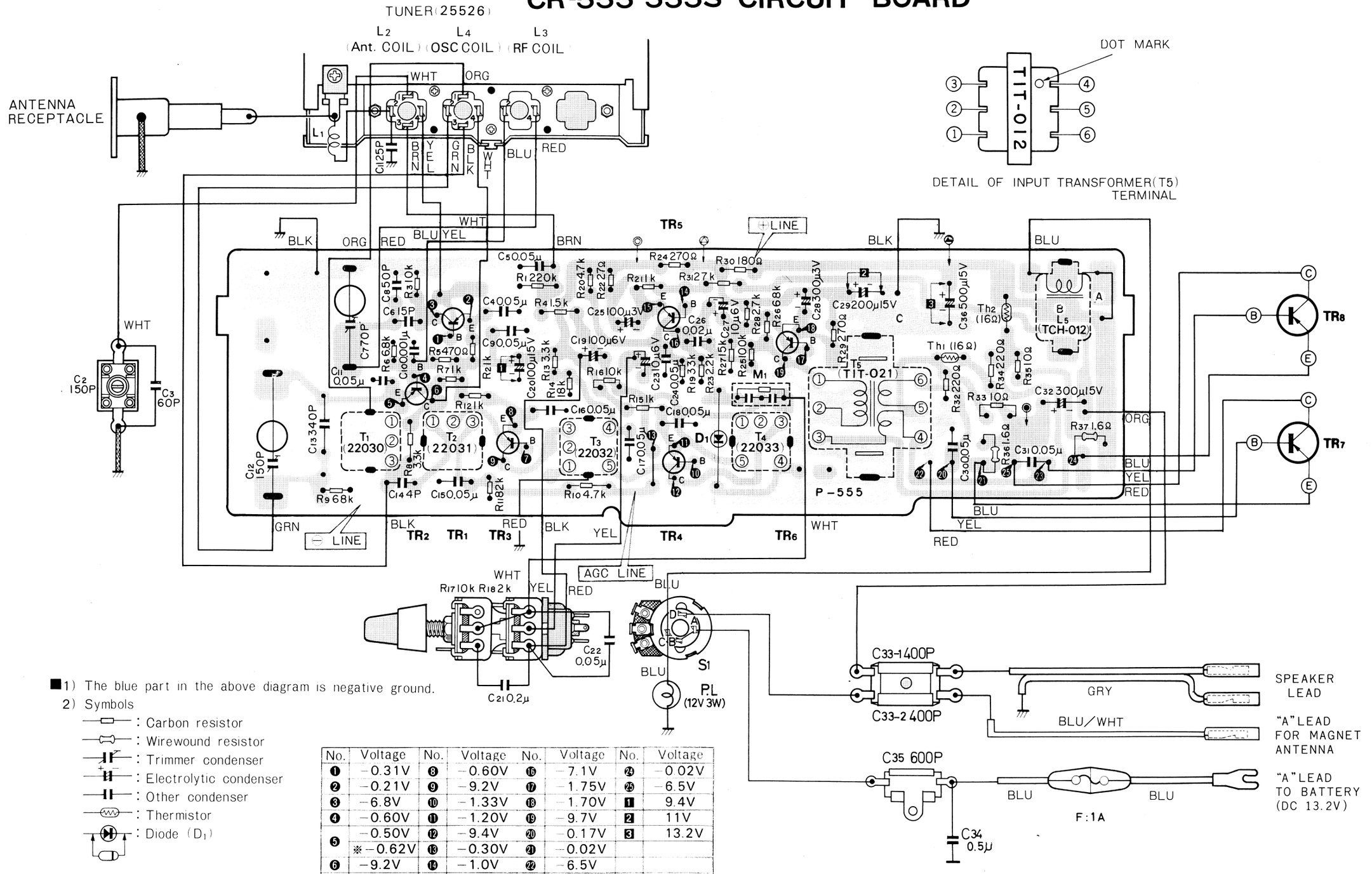


■1) The blue part in the above diagram is negative ground.

2) Symbols

- : Carbon resistor
- : Wirewound resistor
- : Trimmer condenser
- : Electrolytic condenser
- : Other condenser
- : Thermistor
- : Diode ($D_1$)

| No. | Voltage | No. | Voltage | No. | Voltage | No. | Voltage |
|---|---|---|---|---|---|---|---|
| ❶ | −0.31V | ❽ | −0.60V | ⓰ | −7.1V | ㉔ | −0.02V |
| ❷ | −0.21V | ❾ | −9.2V | ⓱ | −1.75V | ㉕ | −6.5V |
| ❸ | −6.8V | ❿ | −1.33V | ⓲ | −1.70V | 1 | 9.4V |
| ❹ | −0.60V | ⓫ | −1.20V | ⓳ | −9.7V | 2 | 11V |
| ❺ | −0.50V | ⓬ | −9.4V | ⓴ | −0.17V | 3 | 13.2V |
| | ※−0.62V | ⓭ | −0.30V | ㉑ | −0.02V | | |
| ❻ | −9.2V | ⓮ | −1.0V | ㉒ | −6.5V | | |
| ❼ | −0.70V | ⓯ | −0.90V | ㉓ | −0.17V | | |